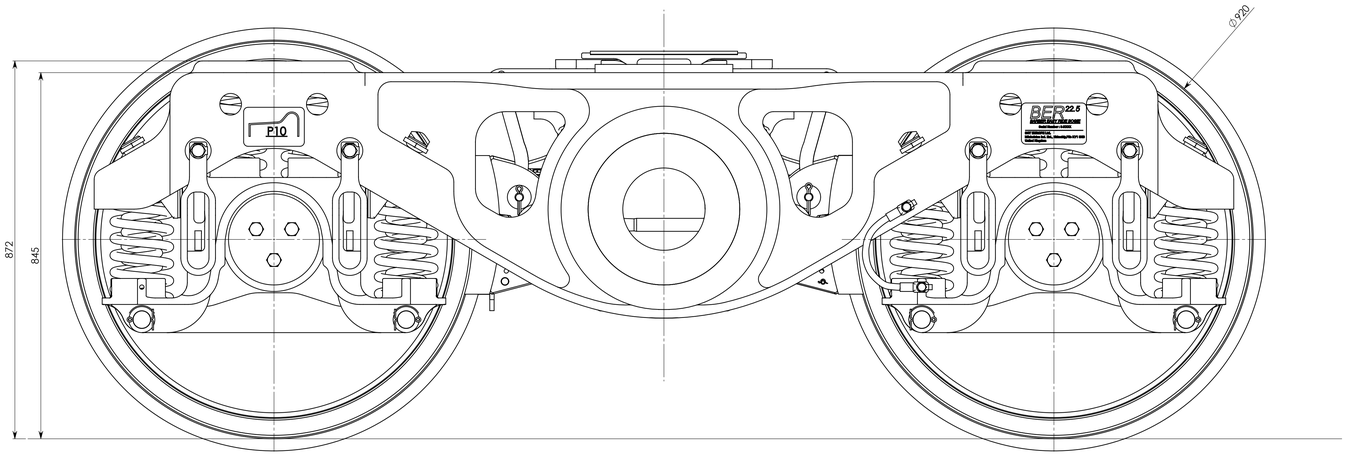

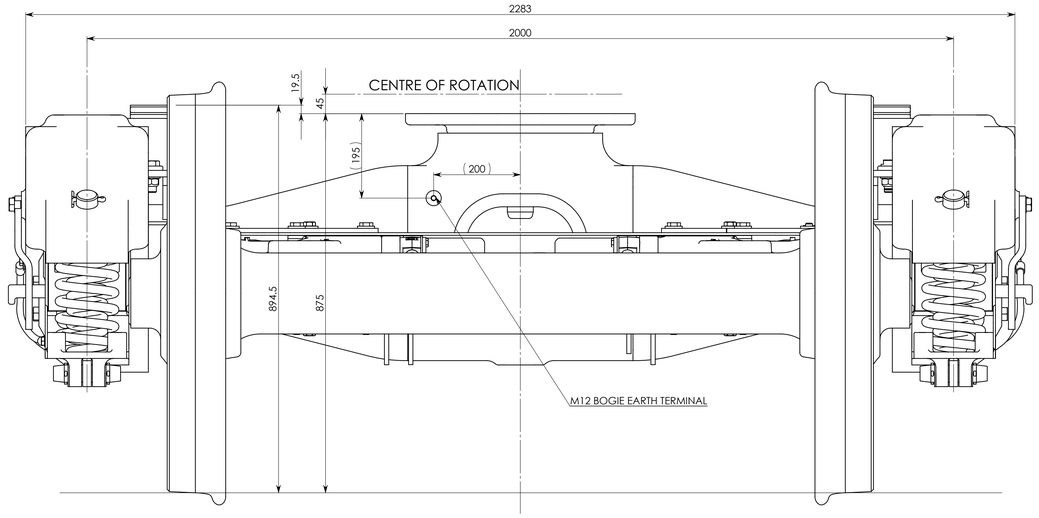

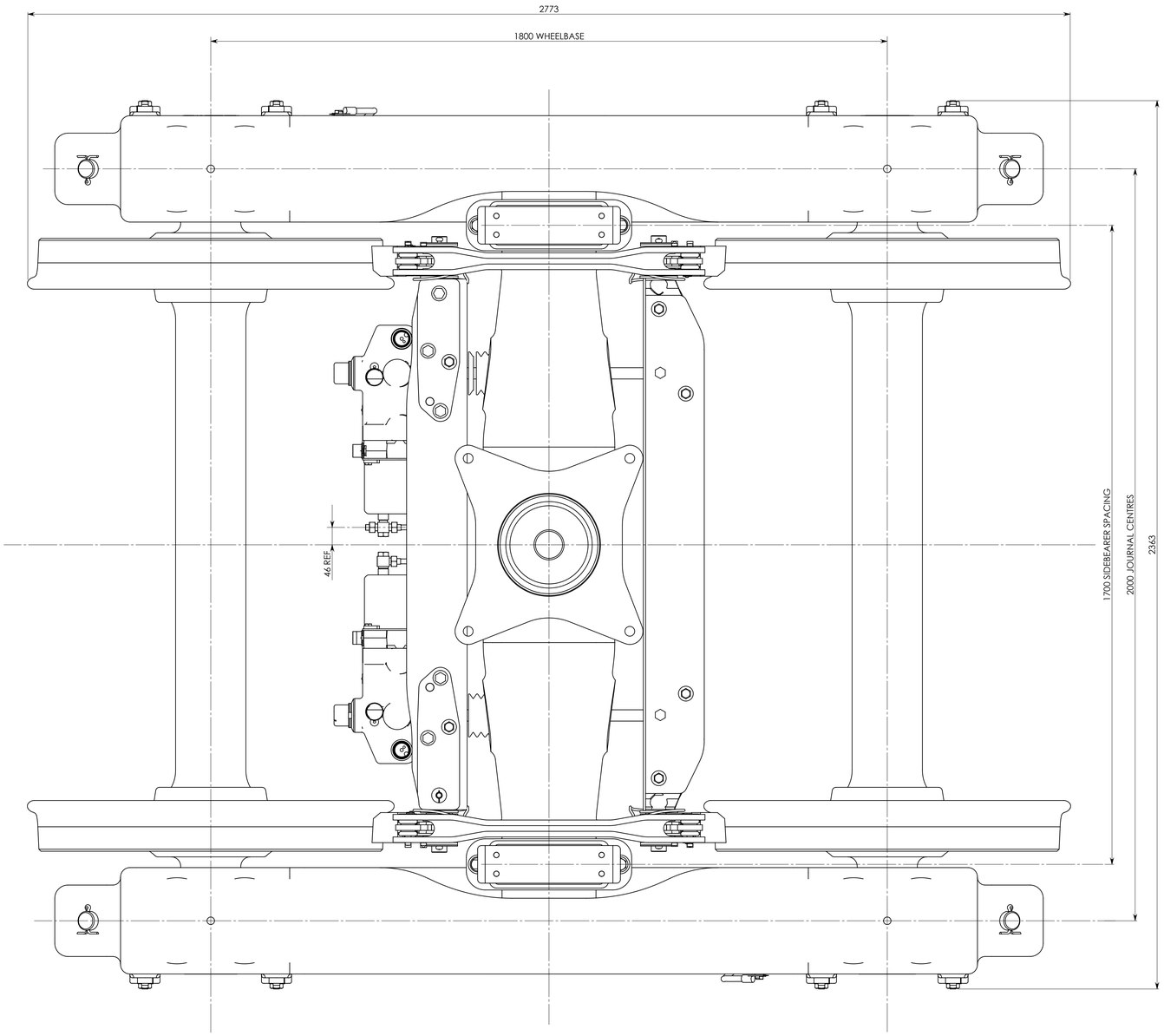

NOTE : DRAWN AT 27 TONNE TARE

- 1.8M AXLE PITCH
- 22.5 Te MAXIMUM AXLE LOAD UK
- 25 Te MAXIMUM AXLE LOAD EU
- INTEGRATED PUSH BRAKES

THIS DRAWING CONTAINS PROPRIETARY TRADE SECRETS AND CONFIDENTIAL BUSINESS INFORMATION OF SCT EUROPE LTD AND SCT TECHNOLOGY LLC. THIS DRAWING AND THE INFORMATION CONTAINED HEREIN SHALL NOT BE DISCLOSED OR USED FOR ANY PURPOSE BY ANY PERSON WITHOUT THE EXPRESS WRITTEN CONSENT OF SCT EUROPE LTD OR SCT TECHNOLOGY LLC. THIS DRAWING IS PROTECTED UNDER COPYRIGHT LAWS. THE SUBJECT MATTER OF THIS DRAWING MAY BE SUBJECT TO PATENTS. THE SUBJECT MATTER OF THIS DRAWING MAY BE COVERED BY ONE OR MORE PENDING PATENT APPLICATIONS AND/OR ISSUED PATENTS IN ONE OR MORE COUNTRIES.

MACHINING TOLERANCE UNLESS OTHERWISE STATED : ±0.25mm
CASTING WALL THICKNESSES TOLERANCE UNLESS OTHERWISE STATED: ±2mm
CASTING LINEAR TOLERANCES U.O.L. : 0 TO 250mm : ISO 8062 - CT11 OVER 250mm : ISO 8062 - CT10
CUT PLATE TOLERANCES ISO ISO 9013 CLASS A UNLESS OTHERWISE STATED

	0mm - 30mm	30mm to 315mm	OVER 315mm - OVER 1,000mm
12mm THICK AND UNDER	±1.0mm	±1.5mm	±2.0mm
OVER 12mm THICK	±0.5mm	±1.0mm	±1.5mm

	NAME	DATE	MATERIAL:
DRAWN	D. Taylor	16-11-06	
CHK'D	AA	16-11-06	
APPV'D	WJ	16-11-06	WEIGHT: 4819 Kg.

DEBUR AND BREAK SHARP EDGES

REV.	ZONE	DESCRIPTION	BY	DATE
A		FIRST ISSUE	DT	16/11/2006

REVISIONS

CERTIFICATE OF CONFORMITY REQUIRED FOR ALL COMPONENTS

Standard Car Truck Europe Ltd.

TITLE:

OVERALL BOGIE ASSEMBLY

DWG NO. GA-02

REVISION A

A0

SCALE: 1:5

DO NOT SCALE DRAWING

SHEET 1 OF 1