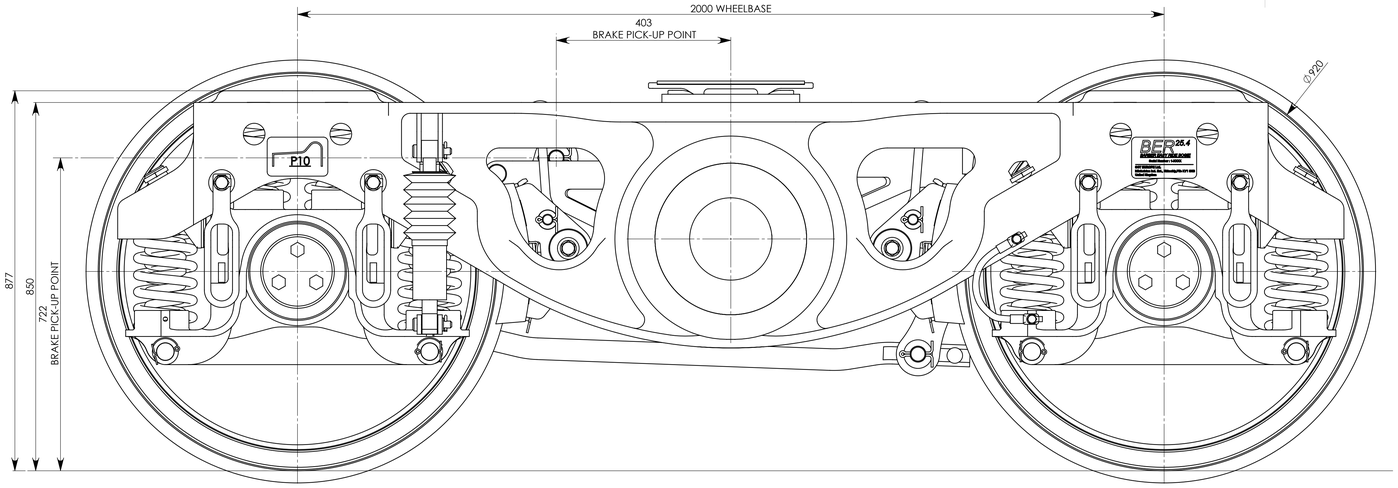

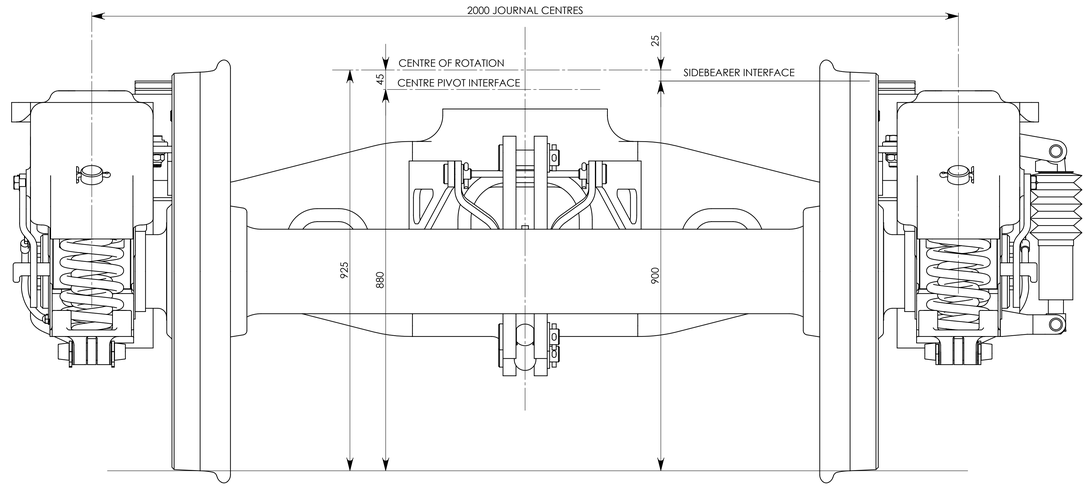

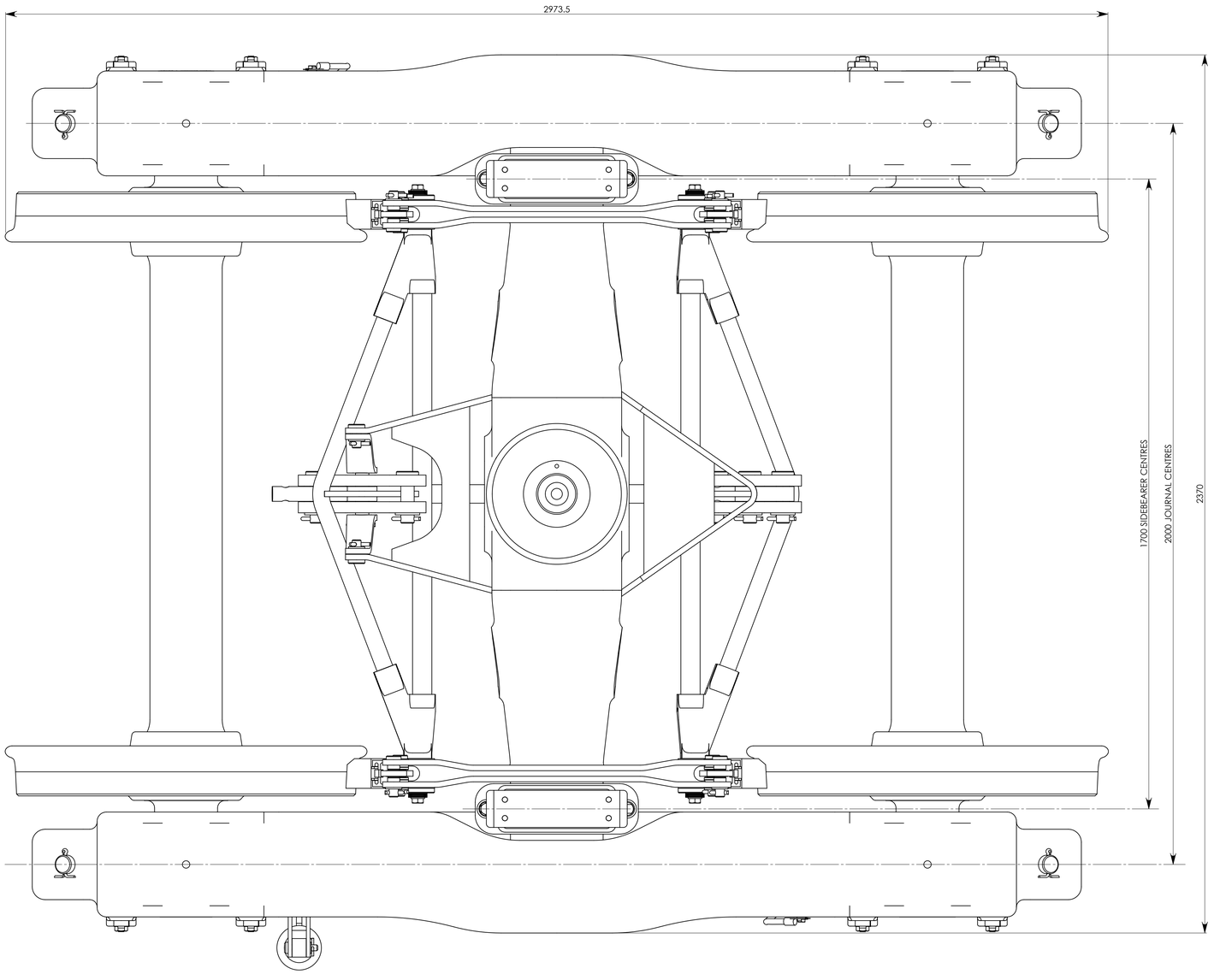

NOTE : DRAWN AT 25 TONNE TARE

- 2M AXLE PITCH
- 25.4 Te MAXIMUM AXLE LOAD
- LEVER PUSH BRAKES

REV.	ZONE	DESCRIPTION	BY	DATE
A	--	FIRST ISSUE	WJ	16/11/2006

REVISIONS

THIS DRAWING CONTAINS PROPRIETARY TRADE SECRETS AND CONFIDENTIAL BUSINESS INFORMATION OF SCT EUROPE LTD AND SCT TECHNOLOGY LLC. THIS DRAWING AND THE INFORMATION CONTAINED HEREIN SHALL NOT BE DISCLOSED OR USED FOR ANY PURPOSE BY ANY PERSON WITHOUT THE EXPRESS WRITTEN CONSENT OF SCT EUROPE LTD OR SCT TECHNOLOGY LLC. THIS DRAWING IS PROTECTED UNDER COPYRIGHT LAW AND ANY COPYING OR REPRODUCTION HEREOF IS PROHIBITED. THE SUBJECT MATTER OF THIS DRAWING MAY BE COVERED BY ONE OR MORE PENDING PATENT APPLICATIONS AND/OR ISSUED PATENTS IN ONE OR MORE COUNTRIES.

MACHINING TOLERANCE UNLESS OTHERWISE STATED : ±0.25mm
CASTING WALL THICKNESSES TOLERANCE UNLESS OTHERWISE STATED: ±3mm
CASTING LINEAR TOLERANCES U.O.S. : 0 TO 250mm : ISO 8062 - CT11 OVER 250mm : ISO 8062 - CT10
CUT PLATE TOLERANCES TO ISO 9013 CLASS A UNLESS OTHERWISE STATED:

	50mm to 315mm	315mm to 1,000mm	OVER 1,000mm	
12mm THICK AND UNDER	±1.0mm	±1.5mm	±2.0mm	
OVER 12mm THICK	±0.5mm	±1.0mm	±1.5mm	

	NAME	DATE	MATERIAL:
DRAWN:	W. Jamieson	16-11-06	
CHK'D:	A. Aitken	16-11-06	
APPV'D:	D. Taylor	16-11-06	WEIGHT: 49Ø4.62

DEBUR AND BREAK SHARP EDGES

CERTIFICATE OF CONFORMITY REQUIRED FOR ALL COMPONENTS

Standard Car Truck Europe Ltd.

TITLE:

OVERALL BOGIE ASSEMBLY

DWG NO. GA-01

REVISION A

A0

SCALE: 1:5, 1:2, 1:1

DO NOT SCALE DRAWING

SHEET 1 OF 1